comer industries driveshafts

End fittings		Max. torque
Tractor	Cod: C12	–
Implement	Cod: 112	–

Notes:

CE CERTIFIED

Warning !
Sections of driveline marked ⚠ are not shielded and must be shielded by an interactive guarding system.
COMER spa declines responsibility if proper guards are not provided or maintained.

Features

Series:	T
Type:	10
Code:	07.125.019.10
Description:	T101310ENC12112
Customer's code:	–
Colour:	Yellow

Last drawing

Index: – Date: –

Application

–

Driveline data

X	1 3/8" Z6 DIN 9611
Y	1 3/8" Z6 DIN 9611
E	1190–46.85"
I	1205–47.44"
P	1120–44.09"

Overlap

	Steel tubes	Guard
Max.	1165–45.87"	1100–43.31"
Min.	368–14.49"	303–11.93"

Greasing point

1)	–
2)	–

The dimensioning is cross to cross

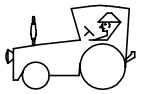

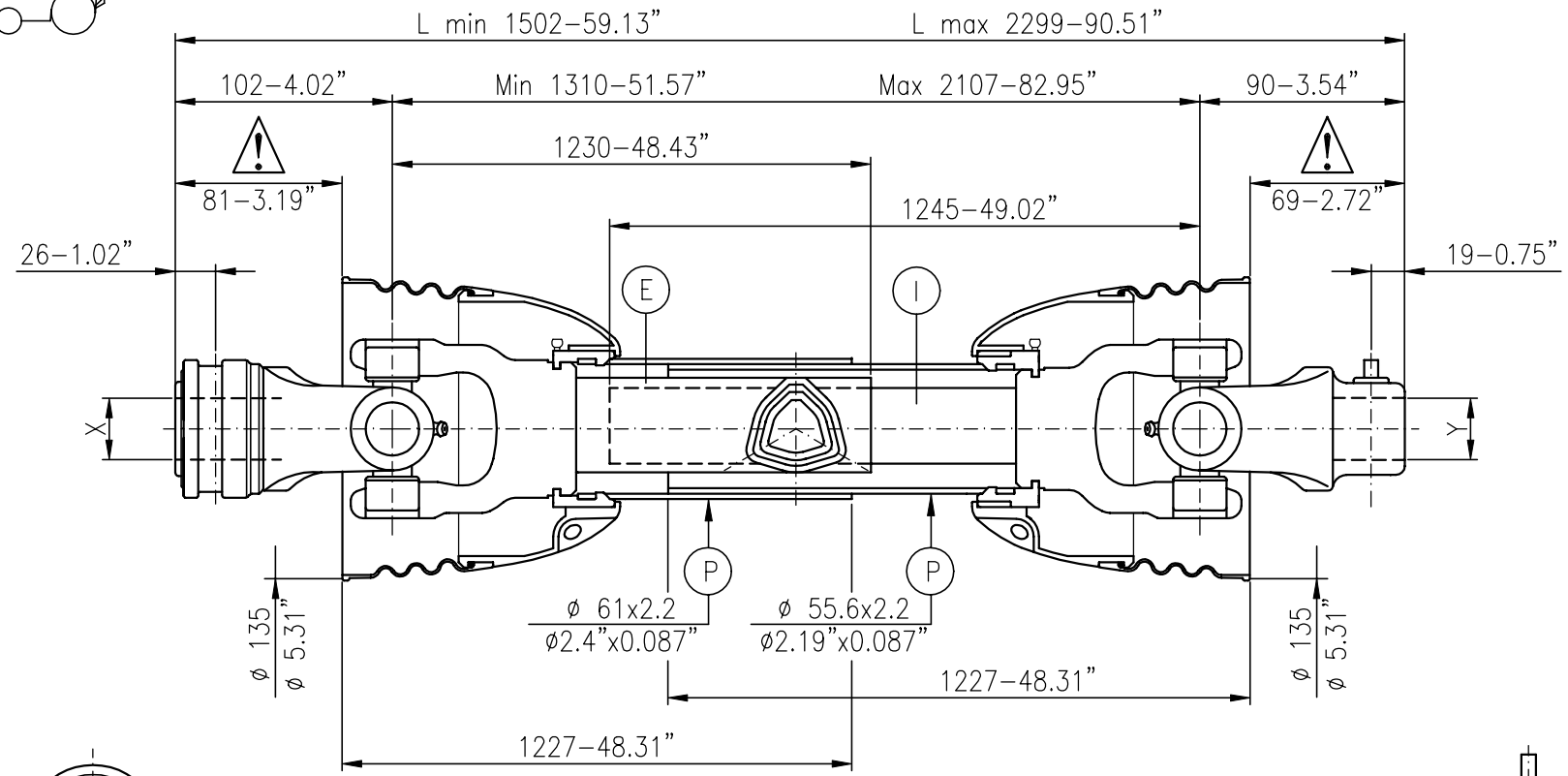

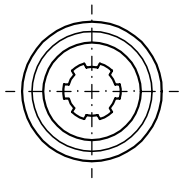

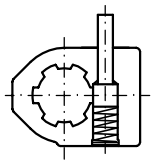

Cross and tubes

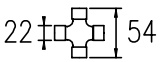

32.5x2.6

26.5x3.5

Data 540 r.p.m.				Data 1000 r.p.m.			
KW	CV	Nm.	in.lb.	KW	CV	Nm.	in.lb.
12	16	210	1850	18	25	172	1500

Continuous operation data and conditions,working angle 5°, average life 1000 hours

540 min.$^{-1}$ r.p.m. max.

Data for only critical velocity			
540 r.p.m.		1000 r.p.m.	
Max.	–	Max.	–
L max.	–	L max.	–
Checked:		Signed by:	F.L.

Customer:

– –

Date: 06–11–09